1. Configuration & Dimensions (in mm):

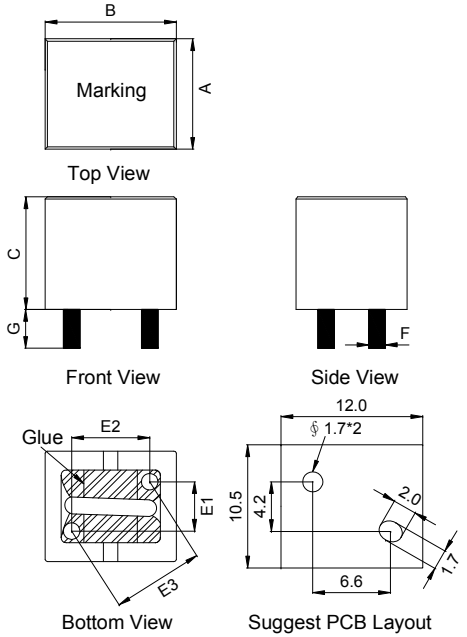

Marking: ITG / R23 / YYWW YY:Year;WW:Week.

A	9.4	±	0.3	mm
B	11.1	±	0.3	mm
C	9.6	±	0.3	mm
E1	4.2	±	0.4	mm
E2	6.6	±	0.4	mm
E3	7.8	±	0.4	mm
F	Φ1.4	±	0.1	mm
G	3.3	±	0.4	mm

2.1 Typical Inductance vs. Current vs. Temp. Rise Characteristics:

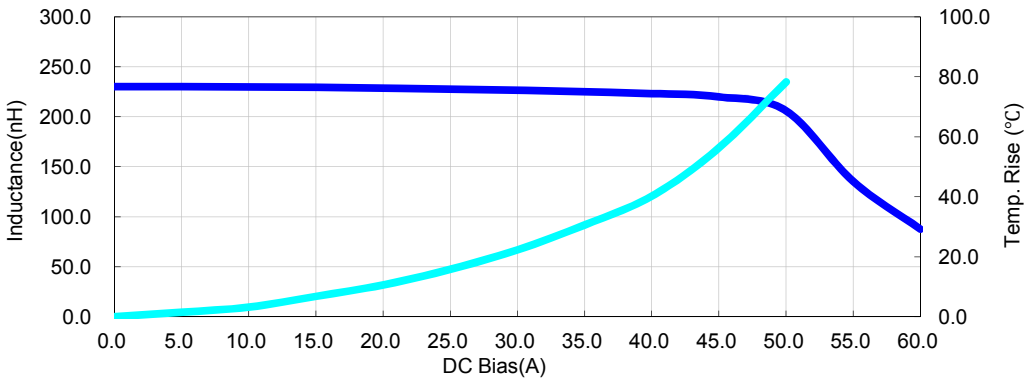

2.2 Typical Inductance vs.Frequency Characteristics:

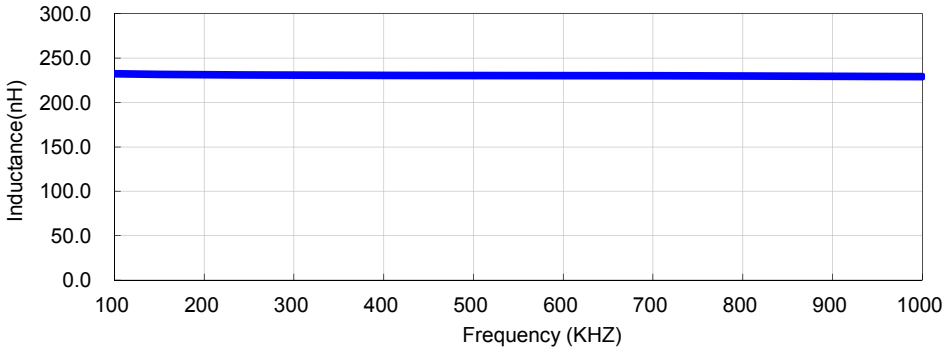

NOTES:

1>.Open Circuit Inductance (OCL):230.0nH ± 15% at 500KHz,1.0Vrms,0Adc;(Ta=25℃).

2>.DCR:0.45mΩ ± 8%.;(Ta=25℃).

3>Isat :L drops 20% Typ. at 500KHz,1.0Vrms,50.0Adc;

4>Irms :40℃ typ. at 500KHz,1.0Vrms,40.0Adc;

5>.Operating temperature: -55℃～+130℃ ;

REVISION HISTORY

REV	DATE	DESCRIPTION	APPROVED
1.0	12/31/2014	NEW	Anthony Yan
1.1			
1.2			
1.3			
1.4			
1.5			

UNLESS OTHERWISE SPECIFIED
DIMENSIONS ARE IN mm.
TOLERANCES
2PL ± 0.3
3PL ± 0.15

Third Angle Projection

Inter-Technical Group

Inductor

230.0nH,50.0A,0.45mΩ DCR

DWG. NO. **QS110910MM-R23LHF**

REV. 1.0

SCALE: 1/1 | SHEET 1 OF 1